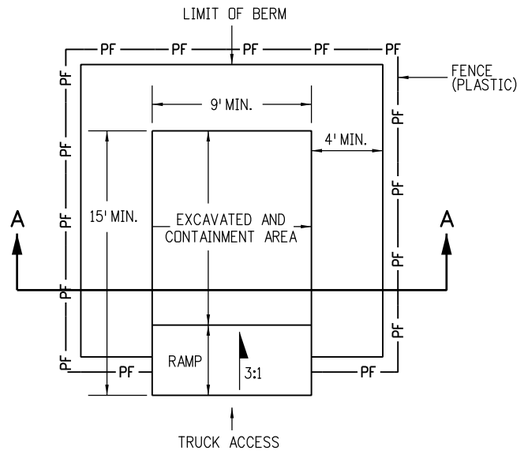

PLAN VIEW

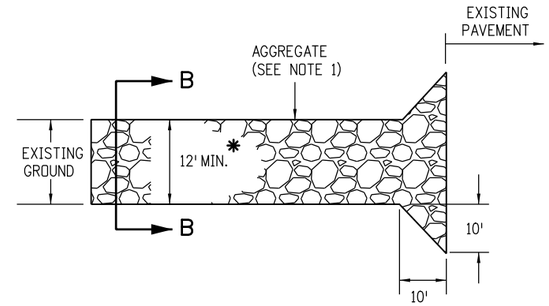

PLAN VIEW

* SHALL EXTEND FULL WIDTH OF INGRESS AND EGRESS OPERATION.

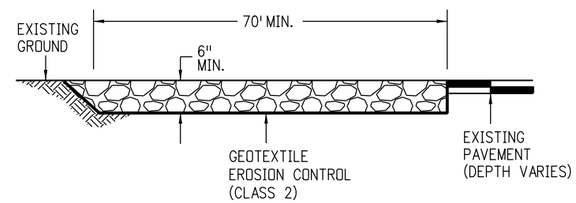

ELEVATION SECTION

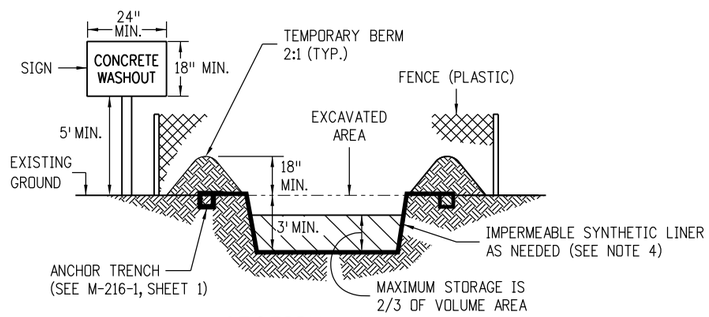

SECTION A-A

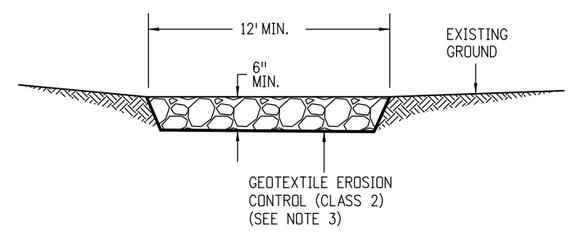

SECTION B-B

NOTES:

1. A FENCE (PLASTIC) CONFORMING TO SECTION 607 SHALL BE INSTALLED AROUND THE CONCRETE WASHOUT AREA, EXCEPT AT THE OPENING.
2. THE CONCRETE WASHOUT SIGN SHALL HAVE LETTERS AT LEAST 3 INCHES HIGH AND CONFORM TO SUBSECTION 630.02.
3. ALL MATERIALS AND LABOR TO COMPLETE THE CONCRETE WASHOUT STRUCTURE SHALL BE INCLUDED IN THE COST OF WORK AND NOT PAID FOR SEPARATELY.
4. THE BOTTOM OF EXCAVATION SHALL BE A MINIMUM OF FIVE FEET ABOVE GROUND WATER. IF NOT, IT SHALL BE LINED WITH AN IMPERMEABLE SYNTHETIC LINER THAT IS DESIGNED TO CONTROL SEEPAGE AT A MAXIMUM RATE OF 6 TO 10 CENTIMETERS PER SECOND.
5. THE PAY ITEM NUMBER FOR CONCRETE WASHOUT STRUCTURE (EACH) IS 208-00045.

CONCRETE WASHOUT STRUCTURE

NOTES:

1. AGGREGATE SHALL CONFORM TO SUBSECTION 208.02 (K).
2. THE CONTRACTOR SHALL PROTECT CURB AND GUTTER THAT CROSSES THE ENTRANCE FROM DAMAGE. PROTECTION OF THE CURB AND GUTTER SHALL BE INCLUDED IN THE COST OF WORK AND NOT PAID FOR SEPARATELY.
3. GEOTEXTILE SHALL CONFORM TO SUBSECTION 712.08.
4. ALL MATERIALS AND LABOR TO COMPLETE THE VEHICLE TRACKING PAD SHALL BE INCLUDED IN THE COST OF WORK AND NOT PAID FOR SEPARATELY.
5. THE PAY ITEM NUMBER FOR VEHICLE TRACKING PAD (EACH) IS 208-00070.

VEHICLE TRACKING PAD

Computer File Information			Sheet Revisions	
Creation Date: 07/04/12 Initials: JBK			Date:	Comments
Last Modification Date: 03/29/16 Initials: LTA	(R-X)	(R-X)	07/16/15	Deleted the two Soil Retention Blanket detail sheets. They are now standard M-216-1 Soil Retention Covering.
Full Path: www.coloradodot.info/business/designsupport	(R-X)	(R-X)	03/29/16	Minor revisions to some dimensions and General Notes.
Drawing File Name: 2080101011.dgn	(R-X)			
CAD Ver.: MicroStation V8 Scale: Not to Scale Units: English	(R-X)			

Colorado Department of Transportation
4201 East Arkansas Avenue
CDOT HQ, 4th Floor
Denver, CO 80222
Phone: 303-757-9021 FAX: 303-757-9868
Division of Project Support JBK/LTA

TEMPORARY EROSION CONTROL

Issued By: Project Development Branch on July 4, 2012

STANDARD PLAN NO.

M-208-1

Sheet No. 1 of 11

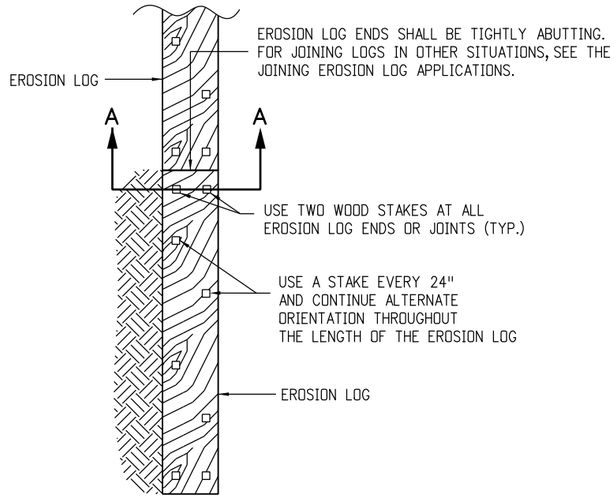

PLAN VIEW

EROSION LOGS PAY ITEMS	
NUMBER	DESCRIPTION
208-00012	TYPE 1 (9")
208-00002	TYPE 1 (12")
208-00013	TYPE 1 (20")
208-00007	TYPE 2 (8")
208-00008	TYPE 2 (12")
208-00009	TYPE 2 (18")

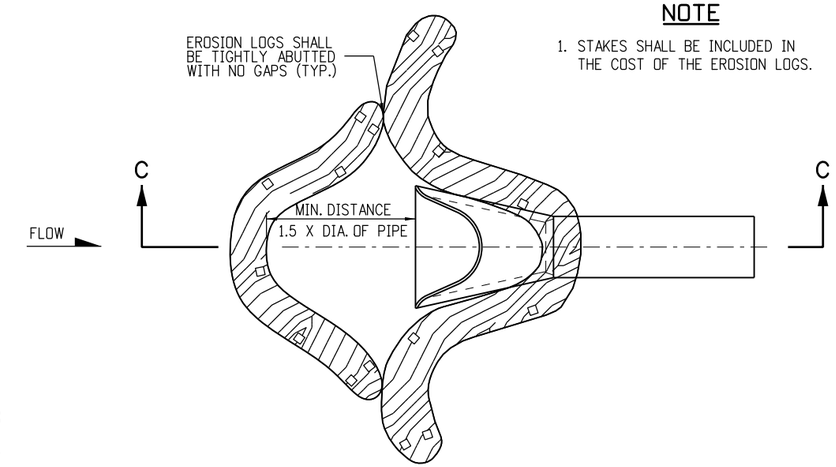

NOTE

1. STAKES SHALL BE INCLUDED IN THE COST OF THE EROSION LOGS.

PLAN VIEW

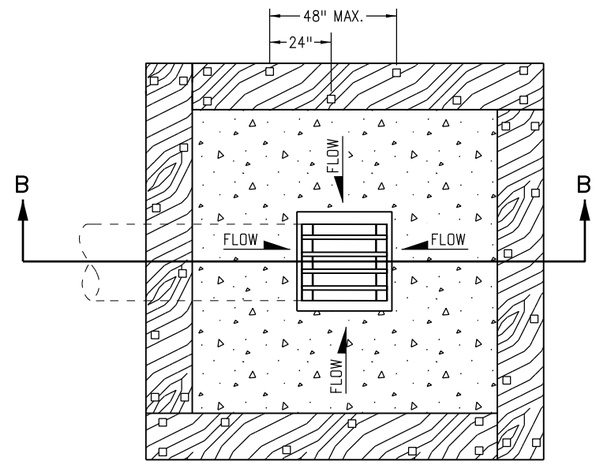

PLAN VIEW

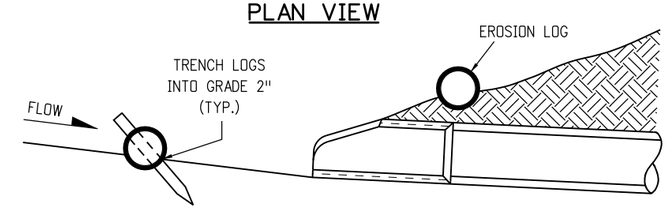

SECTION C-C
(NOT ALL LOGS SHOWN)

EROSION LOG CULVERT INLET PROTECTION

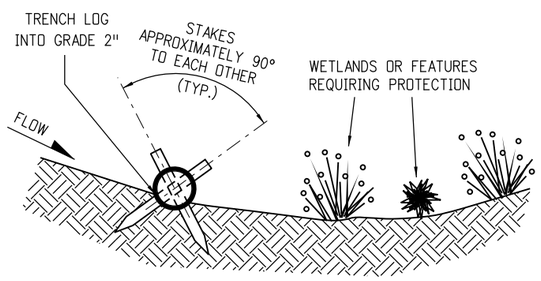

SECTION A-A

TYPICAL STAKE INSTALLATION

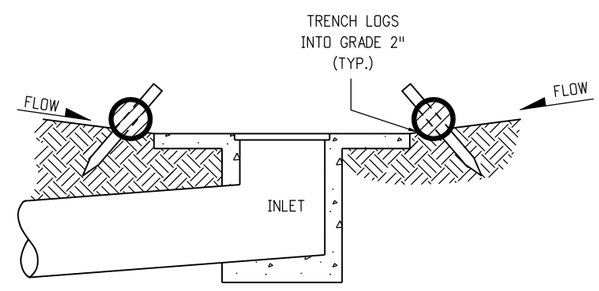

SECTION B-B

NOTE: LOCATE EROSION LOGS AT THE OUTSIDE EDGE OF THE CONCRETE APRON.

EROSION LOG FILTER AT DROP INLET

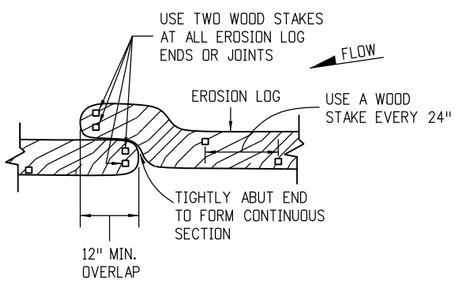

OVERLAP JOINING DETAIL

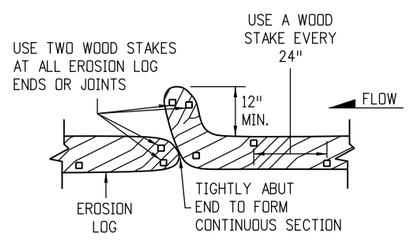

J-HOOK JOINING DETAIL

JOINING EROSION LOG APPLICATIONS

EROSION LOG APPLICATIONS

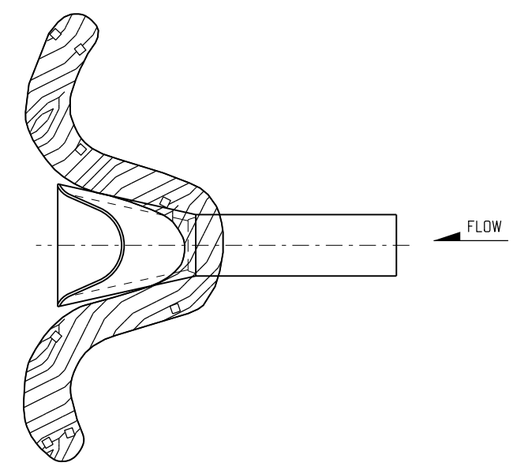

EROSION LOG CULVERT OUTLET PROTECTION

Computer File Information		
Creation Date: 07/04/12	Initials: JBK	
Last Modification Date: 03/29/16	Initials: LTA	(R-X)
Full Path: www.coloradodot.info/business/designsupport		(R-X)
Drawing File Name: 2080102011.dgn		(R-X)
CAD Ver.: MicroStation V8 Scale: Not to Scale Units: English		(R-X)

Sheet Revisions	
Date:	Comments
03/29/16	Minor revisions to some dimensions. Added Erosion Logs Pay Item table.

Colorado Department of Transportation
4201 East Arkansas Avenue
CDOT HQ, 4th Floor
Denver, CO 80222
Phone: 303-757-9021 FAX: 303-757-9868
Division of Project Support JBK/LTA

TEMPORARY EROSION CONTROL

Issued By: Project Development Branch on July 4, 2012

STANDARD PLAN NO.

M-208-1

NOTES

1. SILT FENCE SHALL HAVE A MAXIMUM DRAINAGE AREA OF ONE-QUARTER ACRE PER 100 FEET OF SILT FENCE LENGTH; MAXIMUM SLOPE LENGTH BEHIND BARRIER IS 100 FEET; MAXIMUM GRADIENT BEHIND THE BARRIER IS 2:1.
2. SILT FENCE USED AT TOE OF SLOPE SHALL BE PLACED 5 TO 10 FEET BEYOND TOE OF SLOPE TO PROVIDE STORAGE CAPACITY.
3. SILT FENCE SHALL BE PLACED ON THE CONTOUR WITH ENDS FLARED UP SLOPE.
4. THE MAXIMUM LENGTH OF EROSION LOGS OR SILT FENCES WITHOUT A FLARED END TURNING UPSLOPE IS 150 FEET.

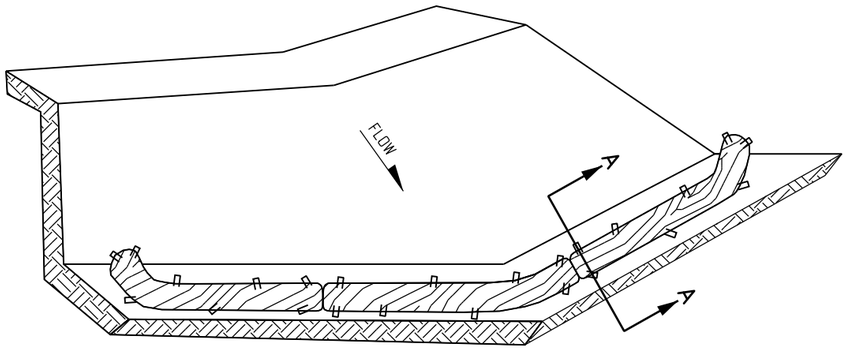

ISOMETRIC VIEW

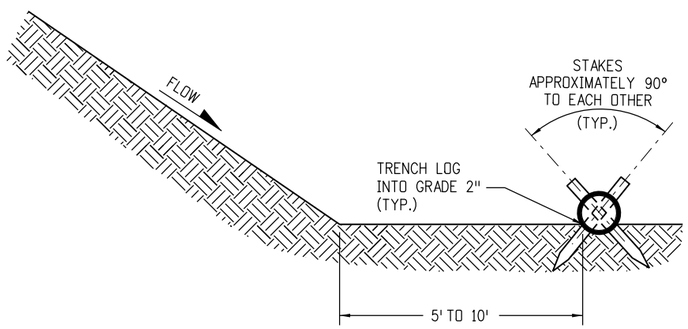

SECTION A-A

NOTES:

1. EROSION LOGS USED AT TOE OF SLOPE SHALL BE PLACED 5 TO 10 FEET BEYOND TOE OF SLOPE TO PROVIDE STORAGE CAPACITY.
2. EROSION LOGS SHALL BE PLACED ON THE CONTOUR WITH ENDS FLARED UP SLOPE.
3. SEE SHEET 2 OF 11 FOR JOINING LOGS DETAIL.

EROSION LOGS PAY ITEMS	
NUMBER	DESCRIPTION
208-00012	TYPE 1 (9")
208-00002	TYPE 1 (12")
208-00013	TYPE 1 (20")
208-00007	TYPE 2 (8")
208-00008	TYPE 2 (12")
208-00009	TYPE 2 (18")

EROSION LOG TOE OF SLOPE PROTECTION

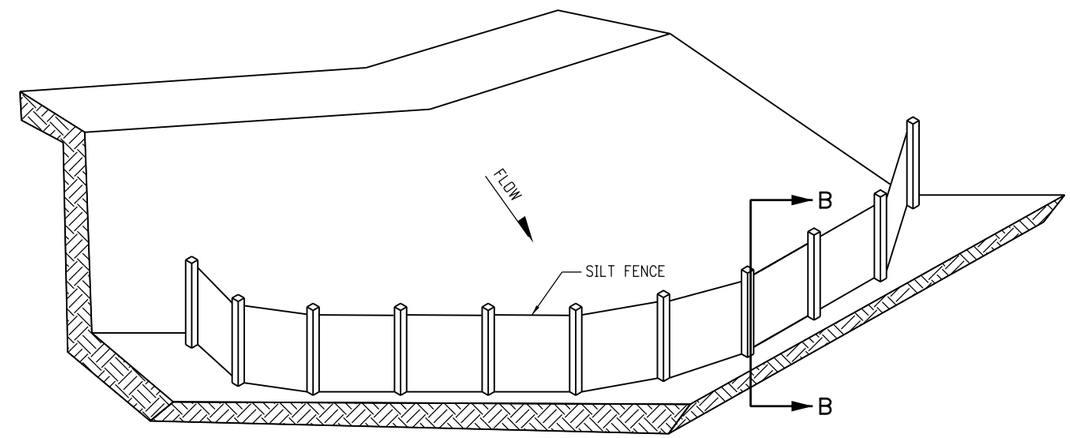

ISOMETRIC VIEW

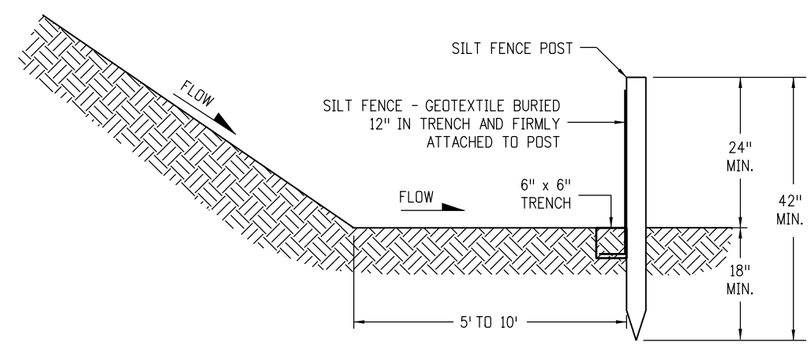

SECTION B-B

SILT FENCE TOE OF SLOPE PROTECTION

NOTE: THE PAY ITEM NUMBER FOR SILT FENCE (LF) IS 208-00020.

TOE OF SLOPE PROTECTION APPLICATIONS

Computer File Information		
Creation Date: 07/04/12	Initials: JBK	
Last Modification Date: 03/29/16	Initials: LTA	(R-X)
Full Path: www.coloradodot.info/business/designsupport		(R-X)
Drawing File Name: 2080103011.dgn		(R-X)
CAD Ver.: MicroStation V8 Scale: Not to Scale	Units: English	(R-X)

Sheet Revisions	
Date:	Comments
03/29/16	Minor revisions to some dimensions. Added Erosion Logs Pay Item table.

Colorado Department of Transportation
4201 East Arkansas Avenue
CDOT HQ, 4th Floor
Denver, CO 80222
Phone: 303-757-9021 FAX: 303-757-9868
Division of Project Support JBK/LTA

TEMPORARY EROSION CONTROL

Issued By: Project Development Branch on July 4, 2012

STANDARD PLAN NO.

M-208-1

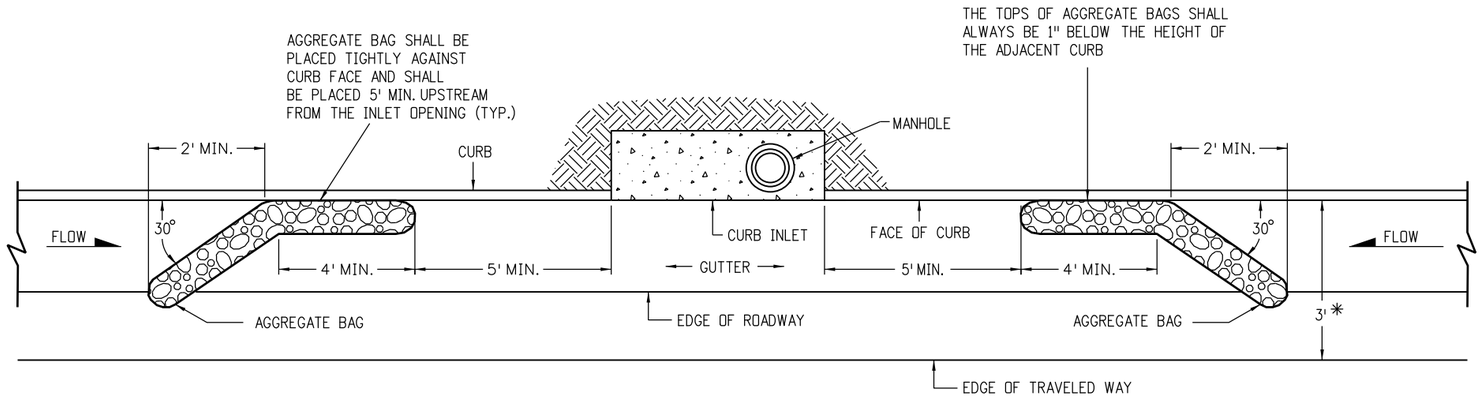

PLAN VIEW

* NOTE: USE AGGREGATE BAGS ONLY WHEN THERE IS A MINIMUM CLEARANCE OF 3 FEET FROM THE EDGE OF THE TRAVELED WAY TO THE FACE OF CURB.

LENGTH OF INLET (L)	NUMBER OF AGGREGATE BAGS UPSTREAM OF INLET
0' - 5'	1
6' -10'	2
L > 10'	3

AGGREGATE BAGS AT STORM DRAIN INLET (TYPE I)

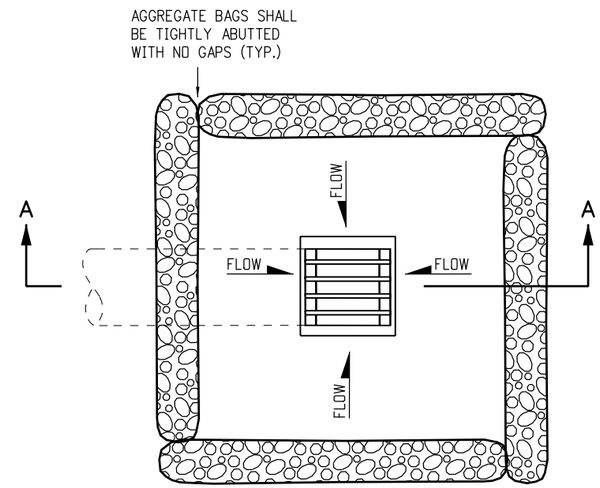

PLAN VIEW

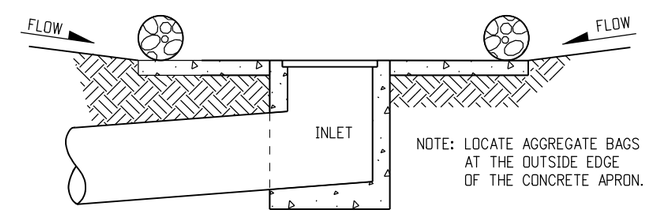

SECTION A-A

AGGREGATE BAGS AT DROP INLET

AGGREGATE BAG APPLICATIONS

NOTE: THE PAY ITEM NUMBER FOR AGGREGATE BAG (LF) IS 208-00035

Computer File Information		Sheet Revisions	
Creation Date: 07/04/12 Initials: JBK		Date:	Comments
Last Modification Date: 03/29/16 Initials: LTA	(R-X)	03/29/16	Added some dimensions and Note.
Full Path: www.coloradodot.info/business/designsupport	(R-X)		
Drawing File Name: 2080104011.dgn	(R-X)		
CAD Ver.: MicroStation V8 Scale: Not to Scale Units: English	(R-X)		

Colorado Department of Transportation
4201 East Arkansas Avenue
CDOT HQ, 4th Floor
Denver, CO 80222
Phone: 303-757-9021 FAX: 303-757-9868
Division of Project Support JBK/LTA

TEMPORARY EROSION CONTROL

Issued By: Project Development Branch on July 4, 2012

STANDARD PLAN NO.

M-208-1

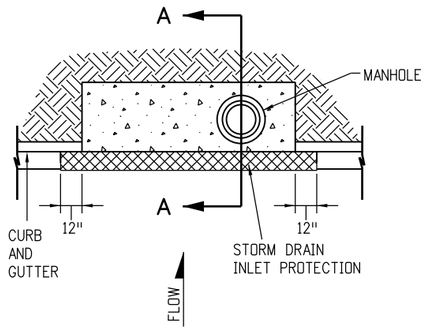

PLAN VIEW

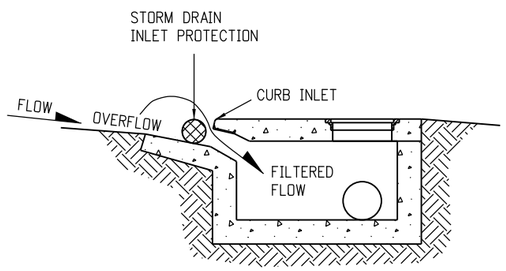

SECTION A-A

STORM DRAIN INLET PROTECTION (TYPE I)

NOTES

1. INLET PROTECTION DEVICE SHALL EXTEND 12 INCHES PAST EACH END OF THE INLET.
2. THE PAY ITEM NUMBER FOR STORM DRAIN INLET PROTECTION (TYPE I) (EACH) IS 208-00051.
3. FOR STORM DRAIN INLET TYPES I AND II, IF THERE IS A MINIMUM CLEARANCE OF 3 FEET FROM THE EDGE OF THE TRAVELED WAY TO THE FACE OF CURB, USE THE AGGREGATE BAGS AT STORM DRAIN INLET (TYPE I) DETAIL ON SHEET 4 INSTEAD.

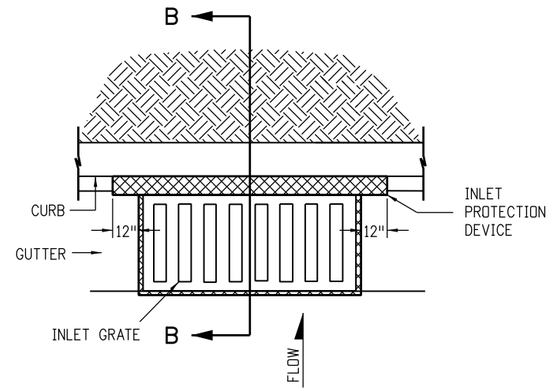

PLAN VIEW

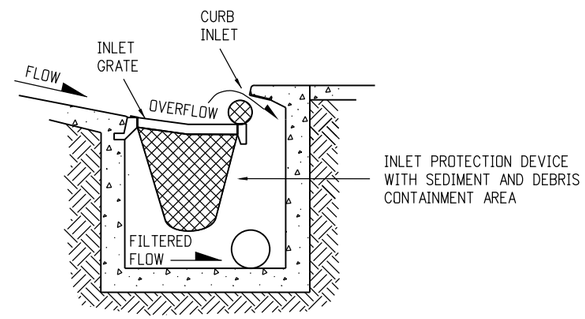

SECTION B-B

OPTION A

STORM DRAIN INLET PROTECTION (TYPE II)

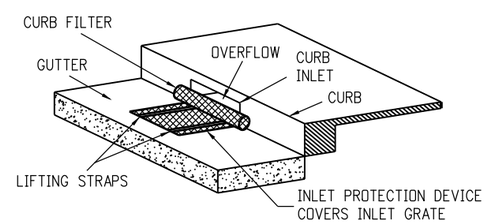

ISOMETRIC VIEW

OPTION B

STORM DRAIN INLET PROTECTION (TYPE II)

NOTE: THE PAY ITEM NUMBER FOR STORM DRAIN INLET PROTECTION (TYPE II) (EACH) IS 208-00052.

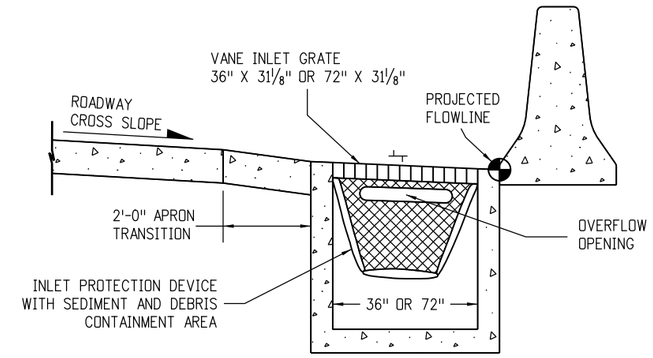

OPTION A

STORM DRAIN INLET PROTECTION (TYPE III)

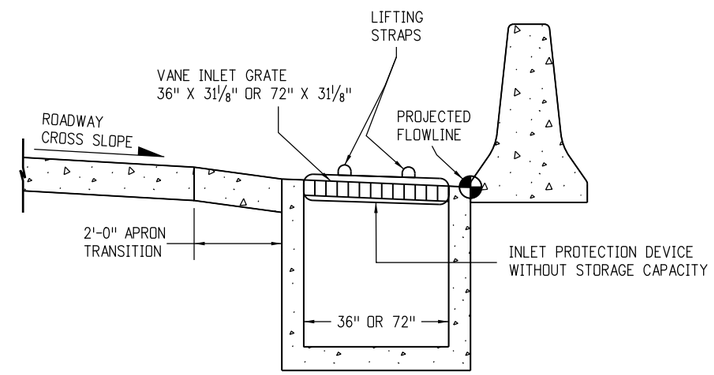

OPTION B

STORM DRAIN INLET PROTECTION (TYPE III)

NOTE: THE PAY ITEM NUMBER FOR STORM DRAIN INLET PROTECTION (TYPE III) (EACH) IS 208-00056.

STORM DRAIN INLET PROTECTION TYPES

Computer File Information		
Creation Date: 07/04/12 Initials: JBK		
Last Modification Date: 03/29/16 Initials: LTA	(R-X)	
Full Path: www.coloradodot.info/business/designsupport	(R-X)	
Drawing File Name: 2080105011.dgn	(R-X)	
CAD Ver.: MicroStation V8 Scale: Not to Scale Units: English	(R-X)	

Sheet Revisions	
Date:	Comments
03/29/16	Added Note 3.

Colorado Department of Transportation
4201 East Arkansas Avenue
CDOT HQ, 4th Floor
Denver, CO 80222
Phone: 303-757-9021 FAX: 303-757-9868
Division of Project Support JBK/LTA

TEMPORARY EROSION CONTROL

Issued By: Project Development Branch on July 4, 2012

STANDARD PLAN NO.

M-208-1

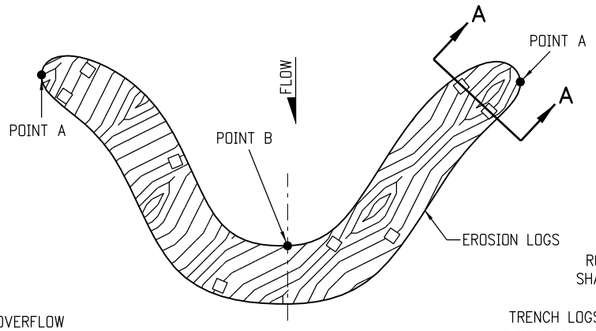

PLAN VIEW

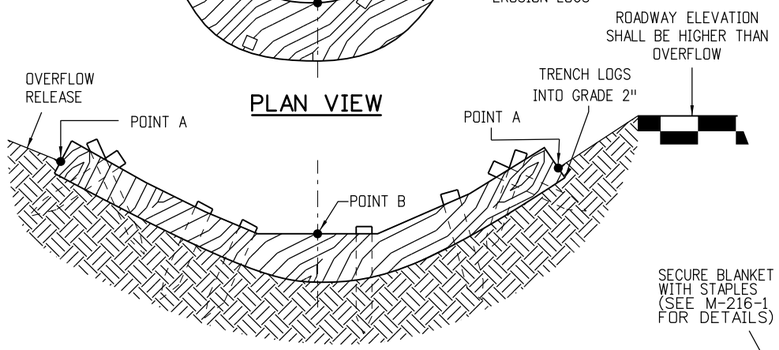

NOTE: POINTS "A" SHALL BE A MINIMUM 4" HIGHER THAN POINT "B".

ELEVATION

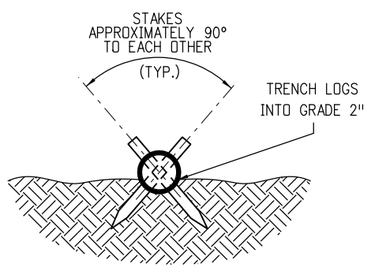

SECTION A-A

NOTES

1. EROSION LOGS SHALL BE EMBEDDED 2 INCHES INTO THE SOIL.
2. STAKES SHALL BE EMBEDDED TO A MINIMUM DEPTH OF 12 INCHES.
3. EROSION LOGS SHALL BE TIGHTLY ABUTTED WITH NO GAPS.
4. V-SHAPED TEMPORARY DITCHES SHALL NOT BE USED. DITCHES SHAL BE GRADED IN A PARABOLIC OR TRAPEZOIDAL SHAPE.

EROSION LOG INSTALLATION

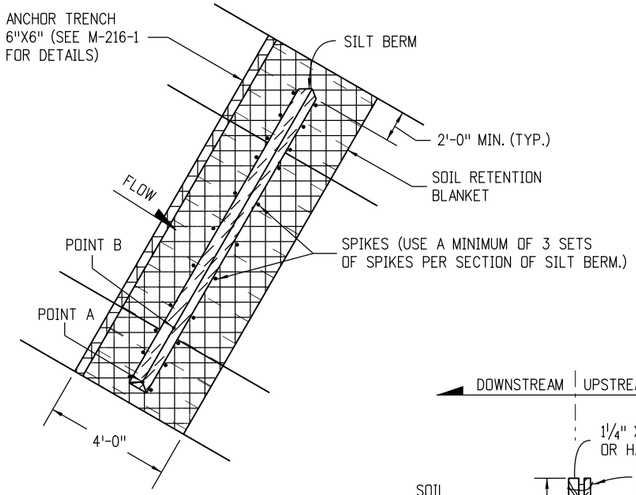

PLAN VIEW

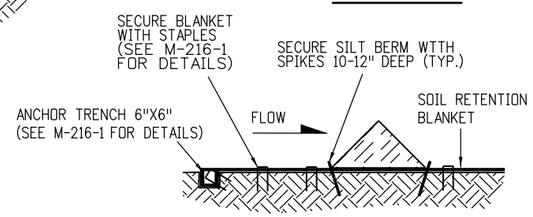

SILT BERM (1) SECTION VIEW

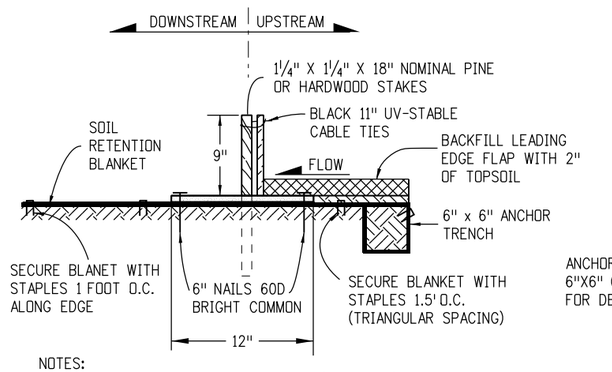

NOTES:

1. MINIMUM 4 NAILS PER SEGMENT (UPSTREAM).
2. MINIMUM 2 NAILS PER SEGMENT (DOWNSTREAM).

SILT BERM (2) SECTION VIEW

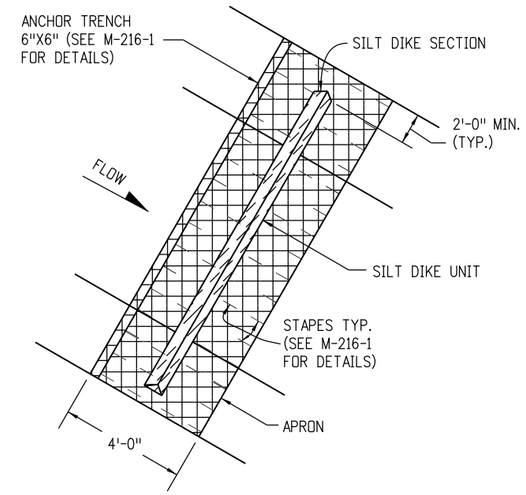

PLAN VIEW

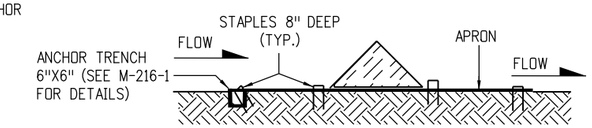

TYPICAL SECTION

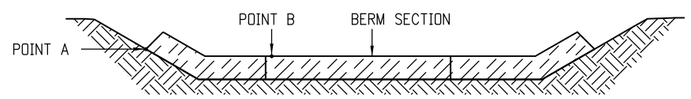

POINT "A" SHALL BE HIGHER THAN POINT "B" TO ENSURE THAT WATER FLOWS OVER THE BERM AND NOT AROUND THE ENDS.

FRONT VIEW

NOTES

1. ANCHOR SOIL RETENTION BLANKET INTO TRENCH WITH 8 INCHES MIN. STAPLES PLACED AT 1 FOOT INTERVALS ALONG EDGE.
2. FILL AND COMPACT TRENCH.
3. SECTIONS OF THE SILT BERM SHALL BE OVERLAPPED WITH NO GAPS.
4. FOR SLOPE AND CHANNEL SPACING SEE THE "SECTION VIEW ALONG DITCH FLOWLINE" DETAIL ON SHEET 11 OF 11.
5. SOIL RETENTION BLANKET SHALL ALWAYS BE REQUIRED.
6. THE PAY ITEM NUMBER FOR SILT BERM (LF) IS 208-00004.

SILT BERM INSTALLATION

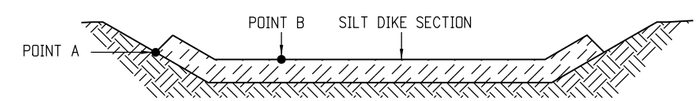

POINT "A" SHALL BE HIGHER THAN POINT "B" TO ENSURE THAT WATER FLOWS OVER THE DIKE AND NOT AROUND THE ENDS.

FRONT VIEW

NOTES

1. ANCHOR APRON INTO TRENCH WITH 8 INCH MINIMUM STAPLES PLACED AT 1 FOOT INTERVALS ALONG EDGE.
2. FILL AND COMPACT TRENCH.
3. THE APRON SHALL EXTEND A MINIMUM OF 2 FEET BEYOND EACH SIDE OF THE TRIANGLE.
4. FOR SLOPE AND CHANNEL SPACING SEE THE "SECTION VIEW ALONG DITCH FLOWLINE" DETAIL ON SHEET 11 OF 11.
5. THE PAY ITEM NUMBER FOR SILT DIKE (LF) IS 208-00001.

SILT DIKE INSTALLATION

DRAINAGE DITCH APPLICATIONS

Computer File Information		
Creation Date: 07/04/12	Initials: JBK	
Last Modification Date: 03/29/16	Initials: LTA	(R-X)
Full Path: www.coloradodot.info/business/designsupport		(R-X)
Drawing File Name: 2080106011.dgn		(R-X)
CAD Ver.: MicroStation V8 Scale: Not to Scale Units: English		(R-X)

Sheet Revisions	
Date:	Comments

Colorado Department of Transportation
4201 East Arkansas Avenue
CDOT HQ, 4th Floor
Denver, CO 80222
Phone: 303-757-9021 FAX: 303-757-9868
Division of Project Support JBK/LTA

TEMPORARY EROSION CONTROL

Issued By: Project Development Branch on July 4, 2012

STANDARD PLAN NO.

M-208-1

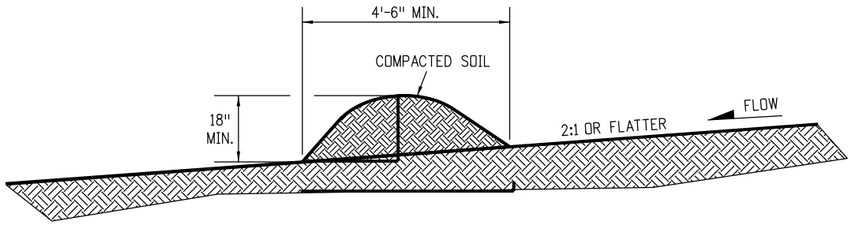

NOTES:

1. BERMS SHALL HAVE A HEIGHT OF 18 INCHES, SIDE SLOPES OF 2:1 OR FLATTER AND A MINIMUM BASE WIDTH OF 4'-6" FEET.
2. BERMS SHALL BE USED TO INTERCEPT AND DIVERT DRAINAGE TO A DESIGNATED OUTLET.
3. BERMS SHALL NOT BE USED WHERE DRAINAGE AREA EXCEEDS 10 ACRES.
4. BERMS SHALL BE CONSTRUCTED OUT OF MATERIAL COMPACTED WITH AT LEAST A MINIMUM OF ONE WHEEL ROLLED COMPACTION.
5. THE PAY ITEM NUMBER FOR TEMPORARY BERM (LF) IS 208-00300.
6. BERMS SHALL BE CONSTRUCTED OUT OF ACCEPTABLE MATERIAL THAT CAN BE COMPACTED AND RECEIVE AT A MINIMUM HEAVY EQUIPMENT WHEEL ROLLED COMPACTION.

TEMPORARY BERM

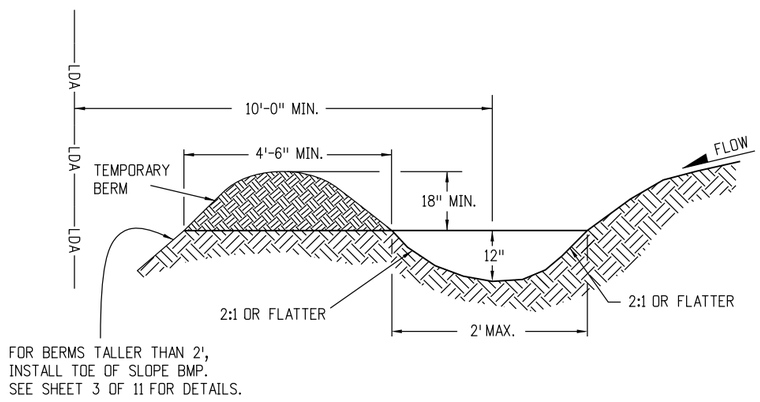

NOTES

1. TEMPORARY DIVERSION DITCHES SHALL BE CONSTRUCTED ACROSS THE SLOPE TO INTERCEPT RUNOFF AND DIRECT IT TO A STABLE OUTLET OR SEDIMENT TRAP.
2. USE THE TEMPORARY DIVERSION DITCH IMMEDIATELY ABOVE A NEW CUT, FILL SLOPE, OR AROUND THE PERIMETER OF A DISTURBED AREA.
3. THE GRADIENT ALONG THE FLOW PATH SHALL HAVE A POSITIVE GRADE TO ASSURE DRAINAGE, BUT SHALL NOT BE SO STEEP AS TO RESULT IN EROSION DUE TO HIGH VELOCITY.
4. THE DIVERSION FLOWLINE SHALL ALWAYS BE LOCATED A MINIMUM 10 FEET FROM THE OUTSIDE LIMITS OF DISTURBED AREA BOUNDARY.
5. THE PAY ITEM NUMBER FOR TEMPORARY DIVERSION (LF) IS 208-00301.

TEMPORARY DIVERSION

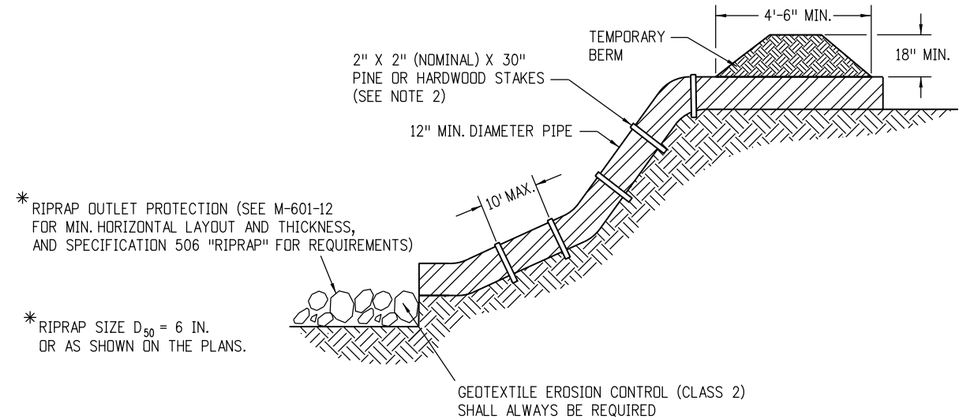

NOTES

1. ANCHOR SIZE VARIES ACCORDING TO PIPE SIZE
2. TO SECURE THE PIPE, DRIVE STAKES INTO GROUND, THEN TIE A 12 GUAGE WIRE BETWEEN THEM ABOVE AND ACROSS THE PIPE'S WIDTH.
3. THE OUTLET SHALL BE ALIGNED WITH THE FLOW DIRECTION OF THE EXISTING GRADE. PERPENDICULAR DISCHARGE TO A CHANNEL SHALL NOT BE ACCEPTABLE.
4. THE GRADE AROUND THE INLET TO THE PIPE SHALL BE COMPACTED.
5. THE PAY ITEM NUMBER FOR TEMPORARY SLOPE DRAINS (LF) IS 208-00060.

TEMPORARY SLOPE DRAINS

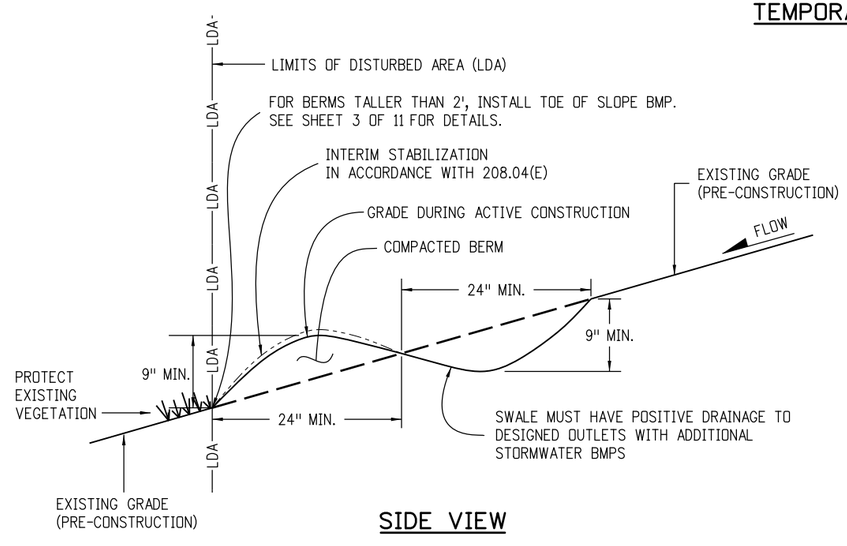

SIDE VIEW

NOTES:

1. BERMS CAN ONLY BE USED IF CONDITIONS ALLOW UNINTERRUPTED POSITIVE GRADE (MAXIMUM GRADIENT 3%) TO AN OUTLET PROTECTED WITH ADDITIONAL BMPS.
2. MAXIMUM DRAINAGE AREA FOR EACH OUTLET FROM THE SWALE SHALL BE LIMITED TO 2 ACRES.
3. CONTRACTOR SHALL SALVAGE TOPSOIL AND PLACE AFTER BERM IS REMOVED FOR FINAL SEEDING OF ALL DISTURBED AREAS.
4. ALL ACTIVITIES REQUIRED TO ACCOMPLISH TEMPORARY BERM (EXCLUDING SURFACE MULCHING) SHALL BE INCLUDED IN THE COST OF WORK AND WILL NOT BE PAID FOR SEPARATELY.
5. BERMS SHALL BE CONSTRUCTED OUT OF ACCEPTABLE MATERIAL THAT CAN BE COMPACTED AND RECEIVE AT A MINIMUM HEAVY EQUIPMENT WHEEL ROLLED COMPACTION.
6. THE PAY ITEM NUMBER FOR TEMPORARY BERM (LF) IS 208-00300.

TEMPORARY BERM (AT EDGE OF DISTURBANCE)

GRADING APPLICATIONS

Computer File Information		
Creation Date: 07/04/12	Initials: JBK	
Last Modification Date: 03/29/16	Initials: LTA	(R-X)
Full Path: www.coloradodot.info/business/designsupport		(R-X)
Drawing File Name: 2080107011.dgn		(R-X)
CAD Ver.: MicroStation V8 Scale: Not to Scale Units: English		(R-X)

Sheet Revisions	
Date:	Comments
03/29/16	Revisions to some dimensions and Notes.

Colorado Department of Transportation
4201 East Arkansas Avenue
CDOT HQ, 4th Floor
Denver, CO 80222
Phone: 303-757-9021 FAX: 303-757-9868
Division of Project Support JBK/LTA

TEMPORARY EROSION CONTROL

Issued By: Project Development Branch on July 4, 2012

STANDARD PLAN NO.

M-208-1

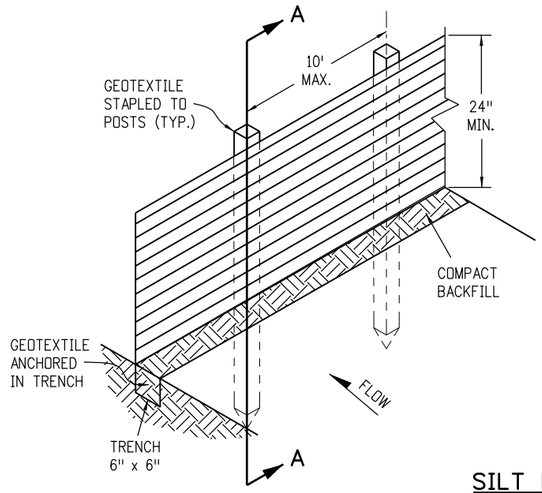

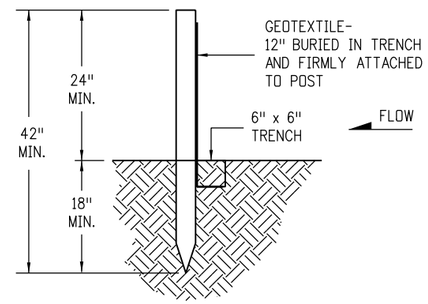

SECTION A-A

SILT FENCE

NOTES

1. GEOTEXTILE SHALL BE ATTACHED TO WOOD POSTS WITH THREE OR MORE STAPLES PER POST. STAPLES SHALL BE HEAVY DUTY WIRE AND AT LEAST 1" INCH LONG
2. WOOD POST SHALL BE 1½" X 1½" NOMINAL.
3. THE PAY ITEM NUMBER FOR SILT FENCE (LF) IS 208-00020.
4. THE SILT FENCE SHALL BE PLACED ON THE CONTOUR (AT THE SAME ELEVATION ±6"). THE ENDS SHALL BE FLARED UP SLOPE (MINIMUM ELEVATION GAIN OF 18").

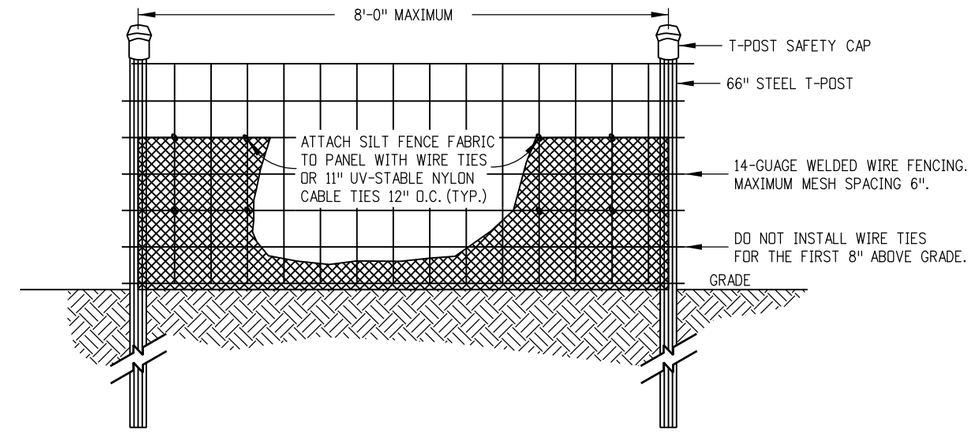

ELEVATION VIEW

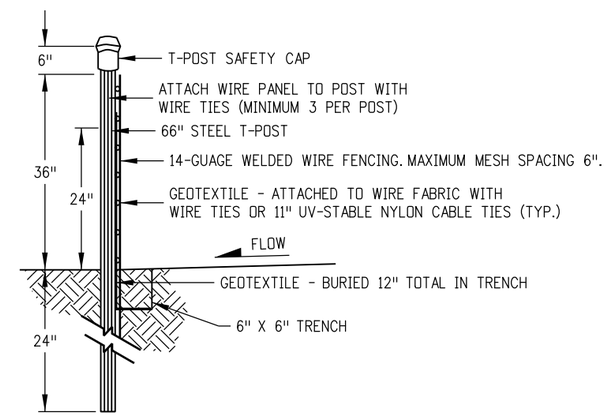

SIDE VIEW

NOTES

1. THE ENDS OF THE SILT FENCE FABRIC SHALL BE JOINED TOGETHER BY WRAPPING APPROX. 6 INCHES OF EACH END AROUND A WOODEN POST ONE FULL TURN, THEN SECURED ALONG THE POST WITH 6 HEAVY DUTY WIRE STAPLES AT LEAST 1 INCH LONG.
2. SILT FENCES SHALL NOT BE USED FOR CHECK DAMS.
3. THE PAY ITEM NUMBER FOR SILT FENCE (REINFORCED) (LF) IS 208-00021.

SILT FENCE (REINFORCED)

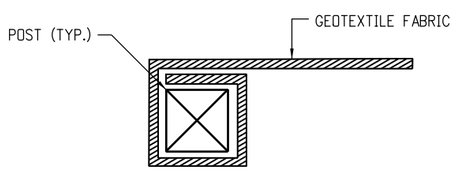

END SECTION DETAIL (PLAN VIEW)

NOTE

1. THE END OF THE SILT FENCE FABRIC SHALL BE WRAPPED APPROX. 6 INCHES AROUND A WOODEN POST ONE FULL TURN, THEN SECURED ALONG THE POST WITH 6 HEAVY DUTY WIRE STAPLES AT LEAST 1 INCH LONG.

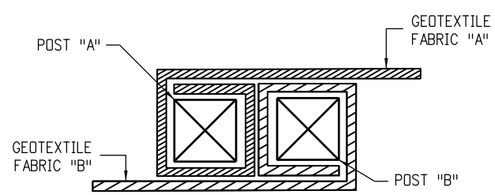

JOINING SECTION DETAIL (PLAN VIEW)

NOTES

1. THE ENDS OF THE SILT FENCE FABRIC SHALL BE JOINED TOGETHER BY WRAPPING APPROX. 6 INCHES OF EACH END AROUND A WOODEN POST ONE FULL TURN, THEN SECURED ALONG THE POST WITH 6 HEAVY DUTY WIRE STAPLES AT LEAST 1 INCH LONG.
2. POSTS SHALL BE TIGHTLY ABUTTED WITH NO GAPS TO PREVENT POTENTIAL FLOW-THROUGH OF SEDIMENT AT JOINT.

SILT FENCE APPLICATIONS

Computer File Information		
Creation Date: 07/04/12	Initials: JBK	
Last Modification Date: 03/29/16	Initials: LTA	(R-X)
Full Path: www.coloradodot.info/business/designsupport		(R-X)
Drawing File Name: 2080108011.dgn		(R-X)
CAD Ver.: MicroStation V8 Scale: Not to Scale Units: English		(R-X)

Sheet Revisions	
Date:	Comments
03/29/16	Minor revisions to some dimensions and Notes.

Colorado Department of Transportation
4201 East Arkansas Avenue
CDOT HQ, 4th Floor
Denver, CO 80222
Phone: 303-757-9021 FAX: 303-757-9868
Division of Project Support JBK/LTA

TEMPORARY EROSION CONTROL

Issued By: Project Development Branch on July 4, 2012

STANDARD PLAN NO.

M-208-1

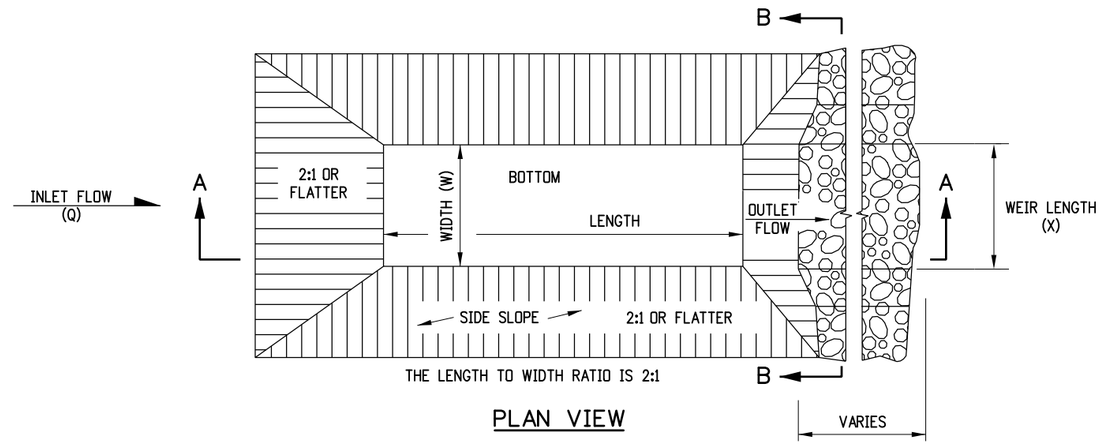

PLAN VIEW

NOTES

1. THE MAXIMUM DRAINAGE AREA IS 5 ACRES.
2. THE MAXIMUM STRUCTURE LIFE IS 2 YEARS.
3. THE STORAGE AREA IS 1800 CUBIC FEET PER ACRE.
4. THE MAXIMUM EMBANKMENT HEIGHT SHALL BE 5 FT. MEASURED ON THE DOWNSTREAM SIDE.
5. THE LENGTH/WIDTH RATIO MAY BE ADJUSTED TO MEET SITE CONDITIONS WHEN APPROVED BY THE ENGINEER.
6. WIDTH (W) OF SEDIMENT TRAP IS APPROXIMATELY EQUAL TO THE WEIR LENGTH (X).
7. SEDIMENT TRAP DESIGN SHALL BE APPROVED BY THE ENGINEER.
8. THE DOWN GRADE FROM WEIR SHALL BE STABLE AND NON-ERODIABLE.
9. THE PAY ITEM NUMBER FOR SEDIMENT TRAP (LF) IS 208-00033.

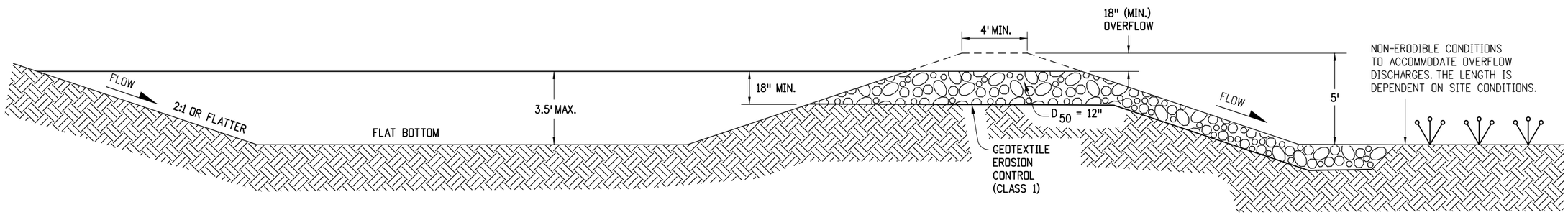

SECTION A-A

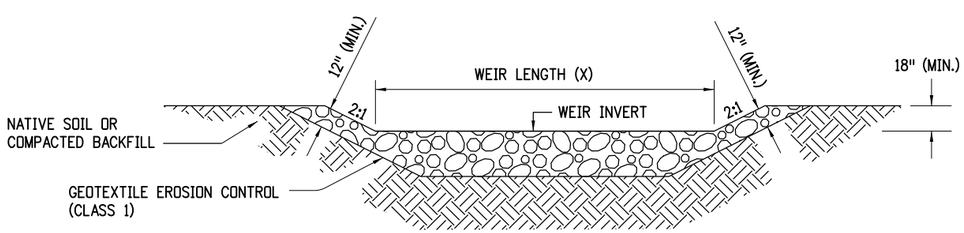

SECTION B-B

DRAINAGE AREA (ACRES)	WEIR LENGTH (FEET)
1	4
2	6
3	8
4	10
5	12

WEIR LENGTH TABLE

SEDIMENT TRAP

Computer File Information	
Creation Date: 07/04/12 Initials: JBK	
Last Modification Date: 03/29/16 Initials: LTA	(R-X)
Full Path: www.coloradodot.info/business/designsupport	(R-X)
Drawing File Name: 2080109010.dgn	(R-X)
CAD Ver.: MicroStation V8 Scale: Not to Scale Units: English	(R-X)

Sheet Revisions	
Date:	Comments
03/29/16	Minor revisions to some dimensions.

Colorado Department of Transportation
4201 East Arkansas Avenue
CDOT HQ, 4th Floor
Denver, CO 80222
Phone: 303-757-9021 FAX: 303-757-9868
Division of Project Support JBK/LTA

TEMPORARY EROSION CONTROL

Issued By: Project Development Branch on July 4, 2012

STANDARD PLAN NO.

M-208-1

NOTES

1. STAKES SHALL BE WOOD AND SHALL BE 2" X 2" X 30" NOMINAL.
2. EROSION BALES SHALL BE 18" X 18" X 36".
3. EROSION BALES SHALL BE ENTRENCHED 4 IN. MINIMUM INTO THE SOIL, THIGHTLY ABUTTED WITH NO GAPS, STAKED, AND BACKFILLED AROUND THE ENTIRE OUTSIDE PERIMETER.
4. EROSION BALES CANNOT BE USED FOR CHECK DAMS.
5. THE PAY ITEM NUMBER FOR EROSION BALES (WEED FREE) (EA) IS 208-00011.

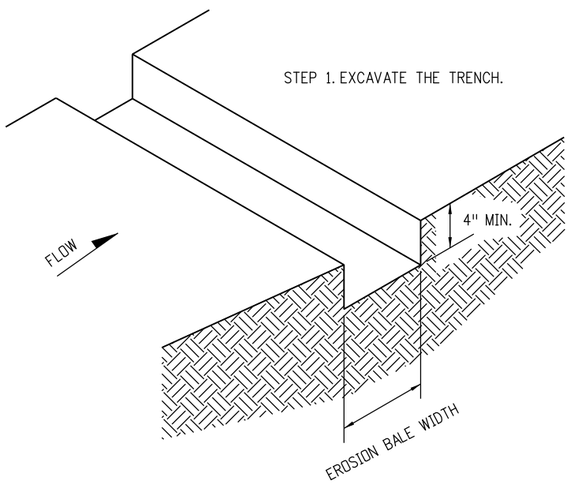

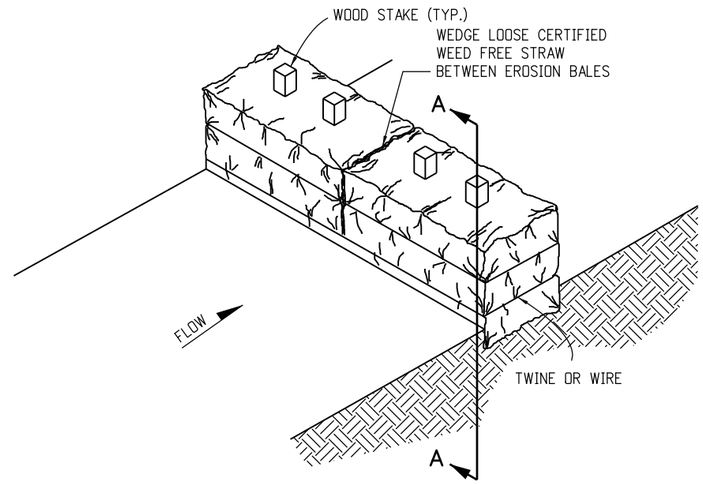

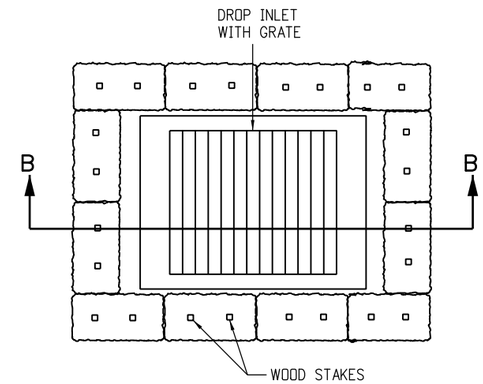

PLAN VIEW

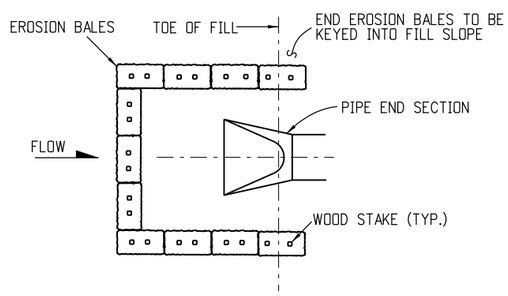

PLAN VIEW

EROSION BALE CULVERT INLET PROTECTION

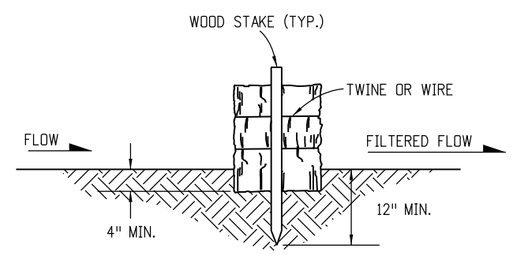

SECTION A-A

EROSION BALE TRENCHING AND STAKING

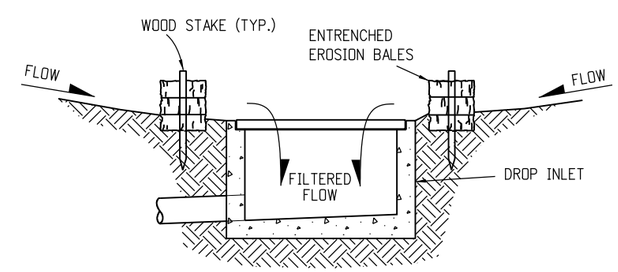

SECTION B-B

EROSION BALE FILTER AT DROP INLET

EROSION BALE APPLICATIONS

Computer File Information		
Creation Date: 07/04/12	Initials: JBK	
Last Modification Date: 03/29/16	Initials: LTA	(R-X)
Full Path: www.coloradodot.info/business/designsupport		(R-X)
Drawing File Name: 20801010011.dgn		(R-X)
CAD Ver.: MicroStation V8 Scale: Not to Scale Units: English		(R-X)

Sheet Revisions	
Date:	Comments
03/29/16	Minor revisions to some dimensions.

Colorado Department of Transportation
4201 East Arkansas Avenue
CDOT HQ, 4th Floor
Denver, CO 80222
Phone: 303-757-9021 FAX: 303-757-9868
Division of Project Support JBK/LTA

TEMPORARY EROSION CONTROL

Issued By: Project Development Branch on July 4, 2012

STANDARD PLAN NO.

M-208-1

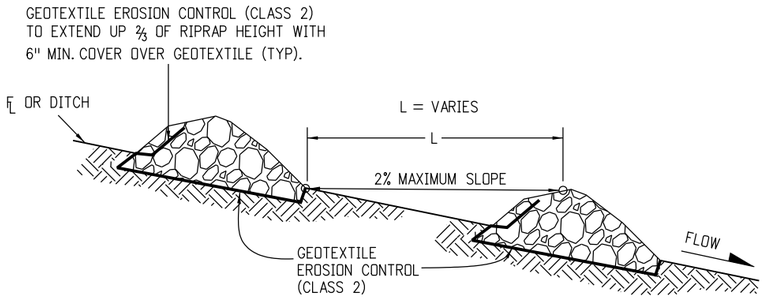

SECTION VIEW ALONG DITCH FLOWLINE

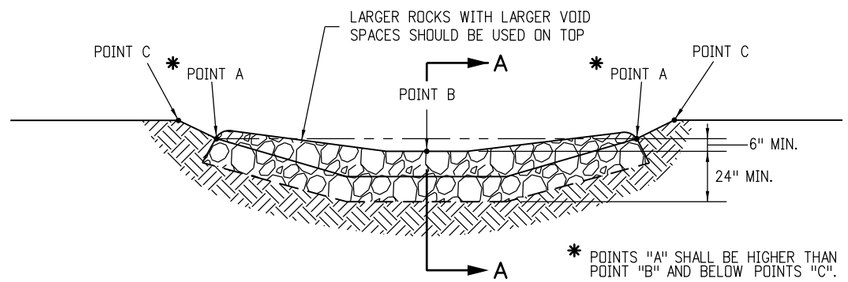

TYPICAL SECTION VIEW

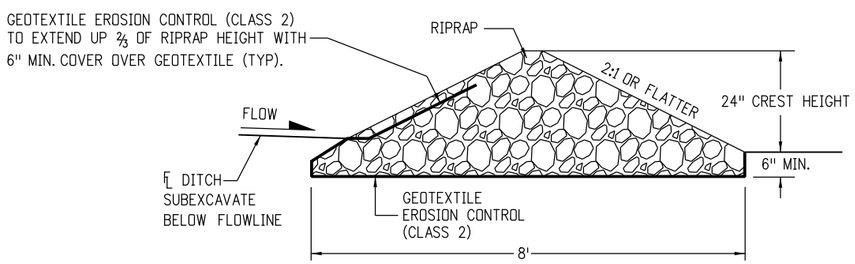

SECTION A-A

NOTES:

1. RIPRAP SIZE D_{50} = 6" OR AS SHOWN ON THE PLANS.
2. THE GEOTEXTILE EROSION CONTROL SHALL BE CLASS 2 AND CONFORM TO THE REQUIREMENTS OF SUBSECTION 712.08.
3. THE ENDS OF RIPRAP CHECK DAM SHALL BE A MINIMUM OF 6 IN. HIGHER THAN CENTER OF CHECK DAM.
4. FOR USE AS TEMPORARY CHECK DAMS ONLY AND NOT FOR PERMANENT INSTALLATIONS.
5. THE PAY ITEM NUMBER FOR ROCK CHECK DAM (EA) IS 208-00041.

ROCK CHECK DAM

Computer File Information	
Creation Date: 07/04/12	Initials: JBK
Last Modification Date: 03/29/16	Initials: LTA
Full Path: www.coloradodot.info/business/designsupport	
Drawing File Name: 20801011011.dgn	
CAD Ver.: MicroStation V8 Scale: Not to Scale	Units: English

	Sheet Revisions	
	Date:	Comments
R-X	03/29/16	Minor revisions to some Notes.
R-X		
R-X		
R-X		

Colorado Department of Transportation
4201 East Arkansas Avenue
CDOT HQ, 4th Floor
Denver, CO 80222
Phone: 303-757-9021 FAX: 303-757-9868
Division of Project Support JBK/LTA

TEMPORARY EROSION CONTROL

Issued By: Project Development Branch on July 4, 2012

STANDARD PLAN NO.

M-208-1